LAUREL MOUNTAIN WHIRLPOOLS

PRINCETON I & II

I	PRINCETON	WHIRLPOOL	4272PW
	PRINCETON	AIR BATH	4272PTA
	PRINCETON	COMBO BATH	4272PWA
	PRINCETON	TUB ONLY	4272PT
II	PRINCETON	WHIRLPOOL	4872PW
	PRINCETON	AIR BATH	4872PTA
	PRINCETON	COMBO BATH	4872PWA
	PRINCETON	TUB ONLY	4872PT

INSTALLATION NOTES: Install this fixture according to the installation manual. Confirm specifications before starting installation.

ELECTRICAL REQUIREMETS:
Whirlpool pump/motor- 120V, 20A, 60HZ,
Air Blower/Heater- 120V, 20A, 60HZ
Dedicated GFCI required

All dimensions are +/- 1/4" and subject to change without notice.

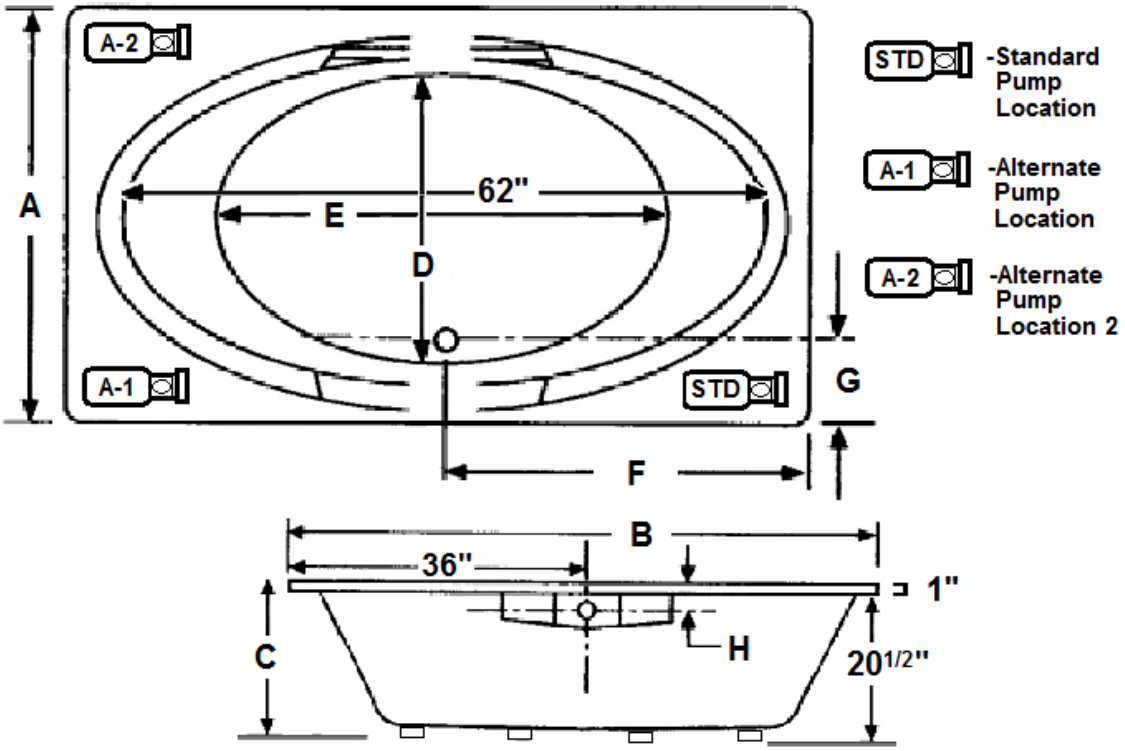

MODEL#	A	B	C	D	E	F	G	H
4272	42	72	21½	28	44	36	9	5
4872	47	71	21½	37	44	36	9	5

MODEL#	WATER CAPACITY OPERATING LEVEL	WATER CAPACITY TO OVERFLOW	WATER DEPTH TO OVERFLOW	APPROX. UNIT WT.
4272 WHIRL/AIR/COMBO	53 gal	83 gal	12½	115 lbs.
4272 SOAKER	-	83 gal	12½	85 lbs.
4872 WHIRL/AIR/COMBO	59 gal.	95 gal	12	140 lbs.
4872 SOAKER	-	95 gal	12	91 lbs.

Website: www.laurelmountainwhirlpools.com
Email: sales@laurelmountainwhirlpools.com
Phone: 800-930-0050
Fax: 800-930-0051

Manufacturing Facility
1610 James P. Rodgers Drive
Valdosta, GA 31601

Sales/Customer Service
26 Nesbitt Rd. Suite 257
New Castle, PA 16105